CAM-MIPIOV7251RAW User Manual

Date	Revised
2022/09/16	First Released

Key Specifications:

1,OV7251,1/7.5Optical Size,0.3M Pixels.
Active array size: 640x480 ,Global Shutter,External Trigger.
2,Output formats: 8bit RAW BW and 10 bit RAW BW.
3,Frame rate: 158fps.
4,Optical coupled isolated external trigger input and flash output support
5,Support 4 work mode:

- A,8 bit stream mode
- B,10bit stream mode
- C,8bit external trigger mode
- D,10bit external trigger mode

Work on 8bit stream mode by default.
6, Software trigger input support.
7, driver feature support : gain,exposure,hflip,vflip
8, Provide GPL Linux 5.15.32 driver source code.

SENSOR	OV7251
Resolution(Max)	640*480,158fps
Optical Size	1/7.5
Pixels	0.3M
Drvier Working Mode	**4 Working Mode** 0,8 bit stream mode 1,10bit stream mode 2,8bit external trigger mode 3,10bit external trigger mode
Software Trigger	Yes
Hardware Trigger	Yes
Global Shutter	Yes
Source Code	vc_mipi_ov7251_driver_pi_lattice_linux5.15.tar.gz
Output format	Y8/Y10

Hardware Description:

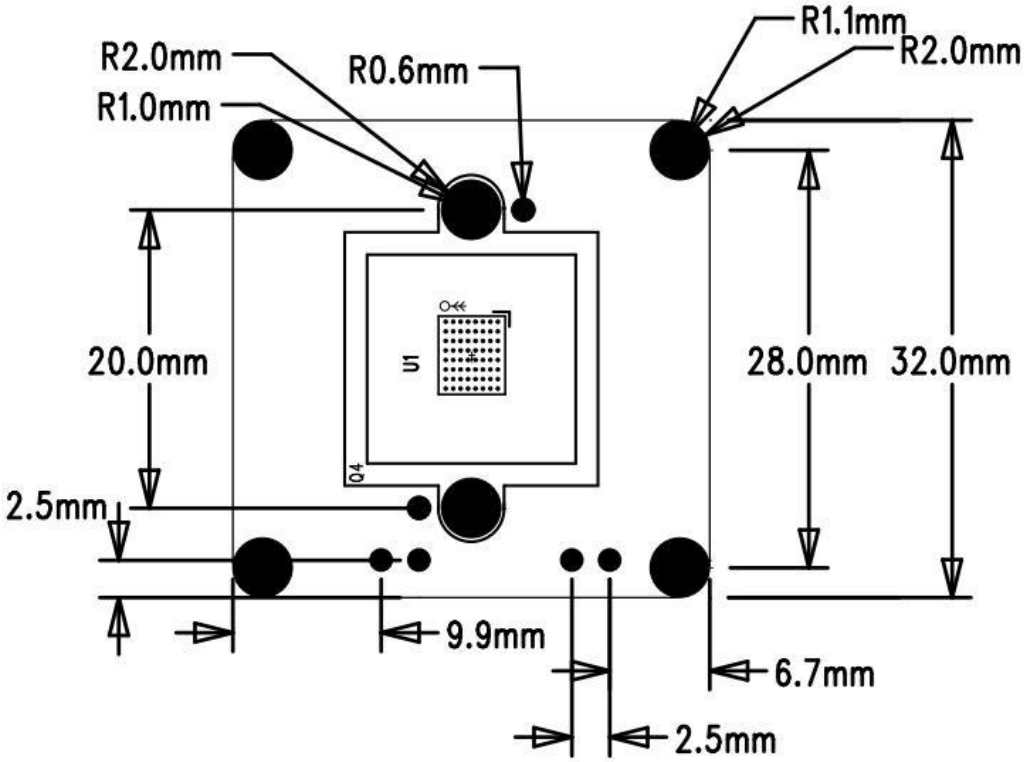

Default Len

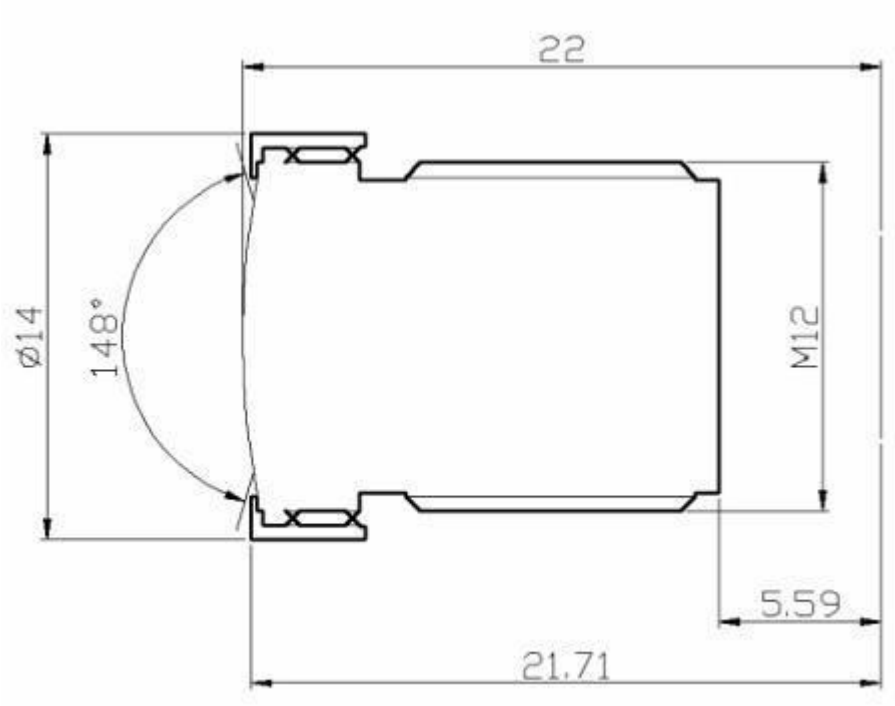

- Interface: M12
- Field of view Fov(D) = 148 degrees , Fov(H) = 118 degrees
- Focal Length 2.8 mm
- Focal Distance Adjustable
- TV DISTORTION <-17%
- F(N) /Aperture 2.2

Signal/Power Connector J1

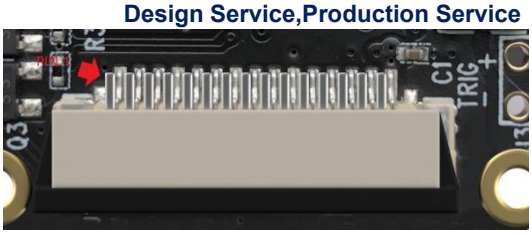

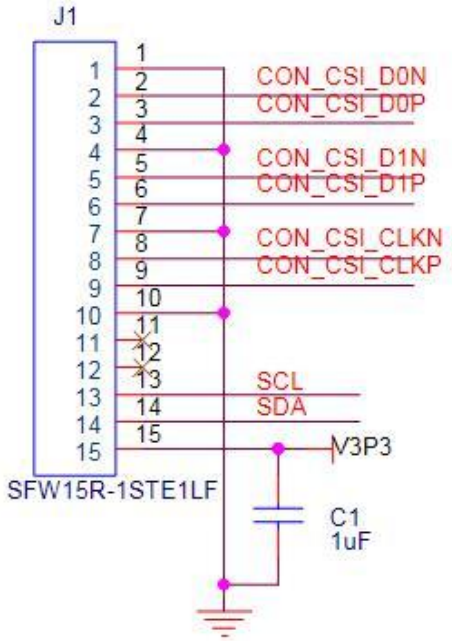

STROB Connector J2

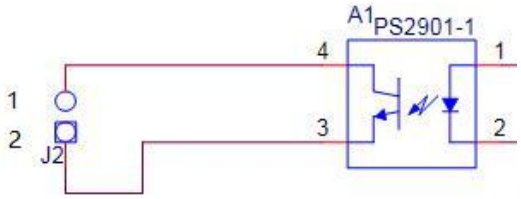

ISO FLASH

J2 PIN	Symbol
1	STROB+
2	STROB-

Reference Circuit

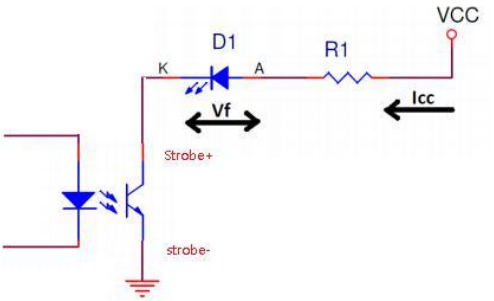

On-board TLP281 optocoupler isolation, Notice the max collector current is 50mA.

Output Specifications

S. No	Parameter	Test Condition	Value Min	Value Typ	Value Max	Unit
1	Driver Voltage (VCC)			12	24	V
2	Drive current (Icc)			10	50	mA
3	Collector Emitter Breakdown Voltage				80	V
4	Collector Emitter Saturation Voltage	Icc = 1 mA		0.1	0.2	V
5	Power Dissipation				150	mW

Collector-Emitter Saturation Voltage	$V_{CE(sat)}$	I_F = 10mA, I_C = 1mA		0.1	0.2	V

So If the current required to drive the Flash LED is no more than 50mA

The value of series resistor: R1 = (VCC- Vf - VCE) / If

VCC: system Voltage

Vf: Forward voltage of Flash LED for current Icc

VCE: Collection Emitter voltage, typical:0.1V

If the current required to drive the flash exceeds 50mA, then it is required to drive it with the help of LED driver circuit, and LED driver circuit can be controlled by using the strobe output pin.

EXT TRIG Connector J3

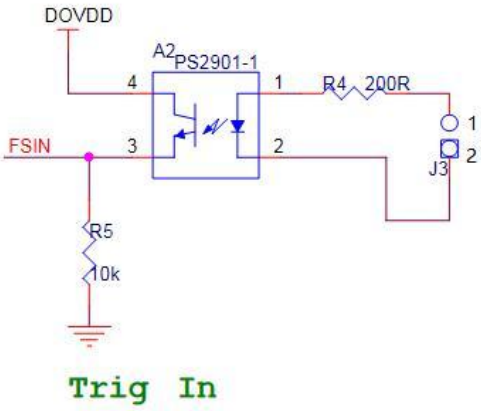

J3 PIN	Symbol	Description
1	TRIG+	3.3V-5.0V External Trigger Input
2	TRIG-	External GND

Reference Circuit

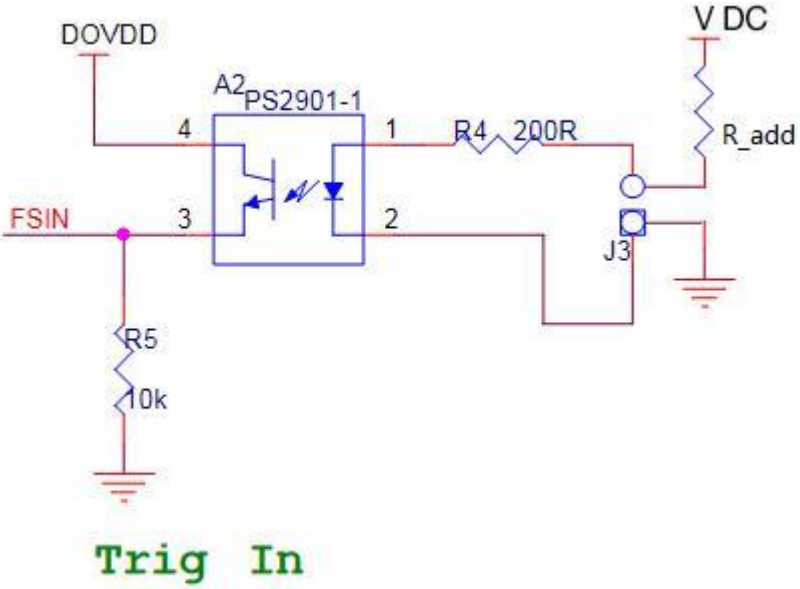

For example, VCC = 12V, Vf = 1.25V

The calculations done here are based on 12VDC. Please do follow these calculations for other voltages like 24VDC.

Let's take the current through IR LED I_f = 20mA.
Voltage drop across the IR LED = 1.25V
The value of Resistor $R_1 = (V_{cc}-V_f)/I_f = (12 – 1.25)/0.02 = 537.5\ \Omega$
Wattage of resistor $R_1 > I_f^2 * R_1 = 0.02^2*537.5 = 0.215W$
Wattage of the resistor R_1 selected should be greater than 0.215W.

And there is a resistor on board(R4 = 200 Ω), So the R_add = R1 - R4 = 537.5 - 200 = 337.5 Ω

Key Operations:

Compile Driver Source Code

Step1 ,Download Source Code from our github:

```
$sudo git clone https://github.com/INNO-MAKER/cam-mipiov7251-trigger.git
```

Step2 ,Install the linux kernel header by:

```
$sudo apt-get install raspberrypi-kernel-headers-$(uname -r)
$sudo reboot
```

Remark:
If you are use the older version of Raspbian or unable to locate package, manually download the correct headers files from below link. We take kernel 5.15.32-v8+(64bit,released data 2020-0404) as an example.
https://archive.raspberrypi.org/debian/pool/main/r/raspberrypi-firmware/

raspberrypi-kernel-headers_1.20220331-1_amd64.deb	2022-04-04 12:55	37M
raspberrypi-kernel-headers_1.20220331-1_arm64.deb	2022-04-04 12:55	9.2M
raspberrypi-kernel-headers_1.20220331-1_armhf.deb	2022-04-04 12:56	27M

```
$sudo wget
https://archive.raspberrypi.org/debian/pool/main/r/raspberrypi-firmware/raspberrypi-kernel-headers_1.20220331-1_arm64.deb
```

Use dpkg tools installl the headers deb files via below command.

```
$sudo dpkg -i raspberrypi-kernel-headers_1.20220331-1_arm64.deb
```

Step3,Compile the driver source code

```
$cd cam-mipiov7251-trigger
$sudo chmod -R a+rwx *
$cd inno_mipi_ov7251_driver_pi_lattice_linux5.15
$sudo make
```

Step4,Install the innomaker driver

```
$sudo make install     #Work on 8bit stream mode by default.
```

Enable Camera

Step1, edit /boot/config.txt

```
$sudo nano /boot/config.txt
```

Add below content to the last line and reboot

```
dtoverlay=inno_mipi_ov7251
```

```
$sudo reboot
```

***** Remark If USE pi zero(bcm2835)**

```
dtoverlay=inno_mipi_ov7251,i2c_pins_28_29=1
```

***** If you wish to usd raspberry pi official driver :(pi driver do not support trigger mode)**

Enable the official driver by edit /boot/config.txt by add below content

```
dtoverlay=ov7251,media-controller=1
```

.

Working Mode Description:

Mode	*Description*	*array*	*Frame rate*
0	8 bit stream mode	640x480	158fps
1	10bit stream mode	640x480	158fps
2	8bit external trigger mode	640x480	158fps
3	10bit external trigger mode	640x480	158fps

Work mode change:

```
$cd cam-mipiov7251-trigger/inno_mipi_ov7251_driver_pi_lattice_linux5.15
$sudo make setmodex      #   x can be 0 1 2 3
```

Get camera module work mode information:

```
$ modinfo inno_mipi_ov7251
```

Software Trigger:

Step1 : set camera work in external trigger mode.

For example set the module work in mode3

```
$ sudo make setmode3
```

Open /dev/video0 device in VLC

Step2: Transfer software trigger command through i2c bus

```
$ i2cset -f -y 10 0x10 204 1
```

Remark:

*** Set the sensor module back to external hardware trigger mode by:

```
$ i2cset -f -y 10 0x10 204 0
```

Hardware Trigger :

*** Set the sensor module back to external hardware trigger mode by:

```
$ i2cset -f -y 10 0x10 204 0
```

Wire connection

You can connect the TRIG- to the GND Pin and connect the TRIG+ to 3.3V Pin of Raspberry Pi to simulate a trigger signal. This test function will comes with repeated trigger signal sometime.

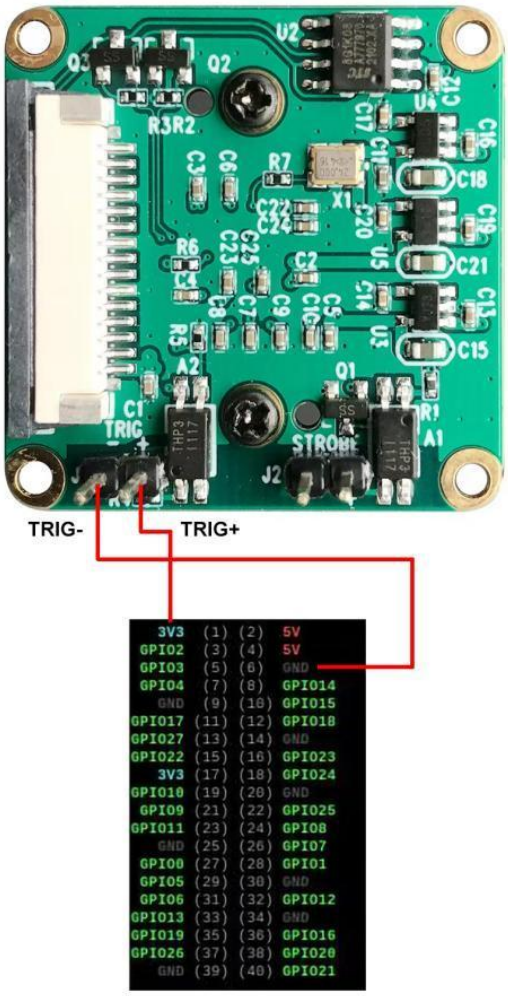

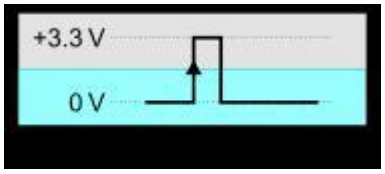

Step1 : set camera work in external trigger mode.

For example set the module work in mode3

```
$ sudo make setmode3
```

Open /dev/video0 device in VLC

Step2: Put external trigger signal through TRIG pin head.

For example a 3.3v gpio rising edge signal will trigger the frame output.

```
$cd cam-mipiov7251-trigger
$sudo ./gpio-sysfs
```